Round Linear Fixture Kit
LAL 2474 Series 4’ and 8’
by Light Tool International

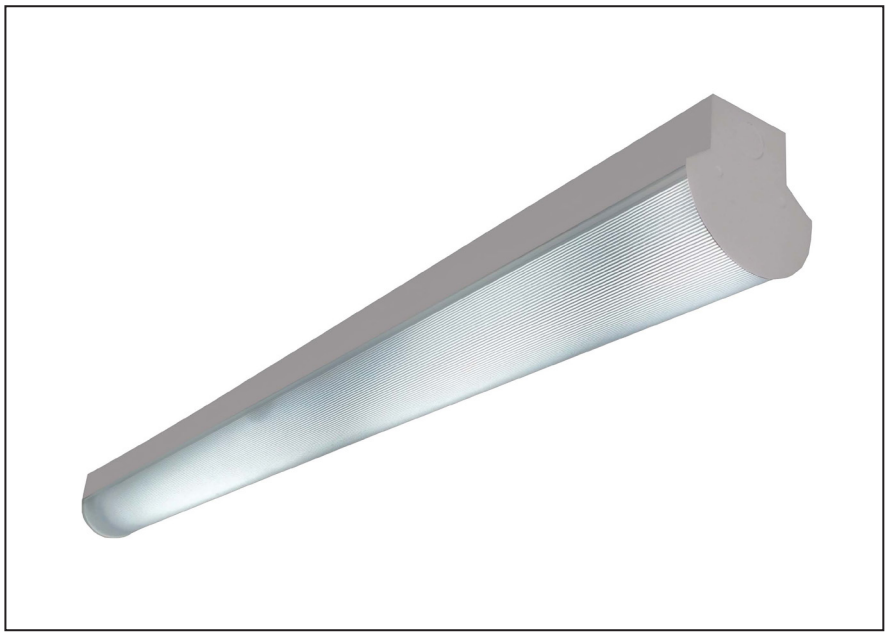

General Description

The LAL 2474 round linear unwired fixture kits are shaped for unsurpassed light distribution without shadows and are especially suited for commercial and industrial applications. Supplied in a variety of size options, they can be row mounted, and installed via surface or pendant mounting. The technical ribbed acrylic diffuser (not included) delivers outstanding light distribution and high light output. Its technical post-painted finish with 92% reflectance reduces maintenance and is durable and efficient.

Features and Benefits

- Pendant or surface-mounted installation options.
- Electrostatically applied polyester powder coat paint in matte white finish with 92% reflectivity.
- Formed and welded in 23-gauge Steel (0.60mm).
- Standard lengths are 4ft and 8ft, and 2ft lengths may be available (contact Customer Service).
- Acrylic technical ribbed diffuser (not included) with 90% light transmission.
- Installed individually or in continuous rows.
- Custom LED pattern holes available (contact Customer Service).

Applications

Suitable for interior applications including hospitality, healthcare, education, retail, and office environments.

Specifications

4’
Length 46.29”
Width 3.77”
Height 3.77”

8’
Length 92.48”
Width 3.77”
Height 3.77”

Housing
23-gauge steel

Lens
Acrylic technical ribbed diffuser
(not included)

Finish
Post painted matte white with minimum 92% reflectivity

Mounting
Ceiling, Surface or Pendant

Please contact A.L.P. for pricing and delivery. A.L.P will support design and development with customer supplied light engines. All specifications subject to change without notice. A.L.P. Lighting Components, Inc. assumes no responsibility for these materials in any luminaire or application. The product is an OEM component kit requiring final assembly by a qualified OEM fixture manufacturer.

A.L.P.
6333 Gross Point Road, Niles, IL 60714
Ph: (877) 257-5841 • Fx: (773) 774-9331
www.alpadvantage.com
© 2024 A.L.P. Lighting Components, Inc.
Sheet/REV# LAL2474 VN062624

Round Linear Fixture Kit
LAL 2474 Series 4' and 8'
by Light Tool International

Dimensions

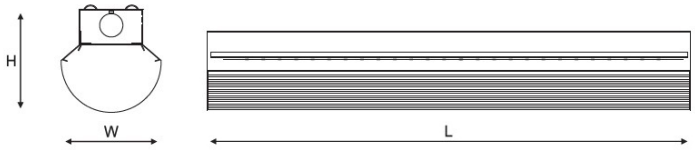

Model	Size	Length	Width	Height
LAL 2474	4ft	46.29	3.77	3.77
	8ft	92.48	3.77	3.77

Exploded View

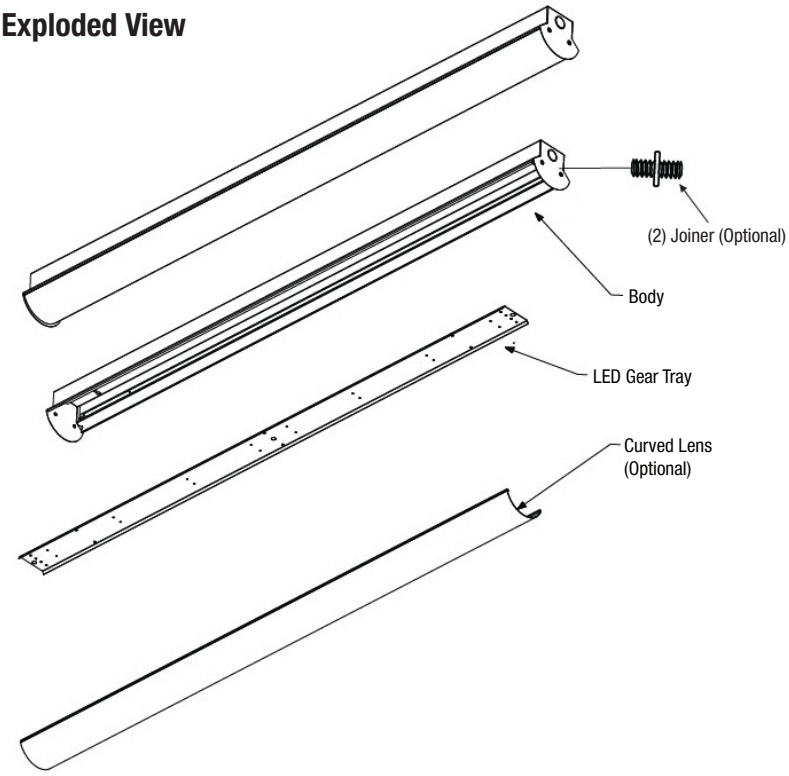

Row Mounting

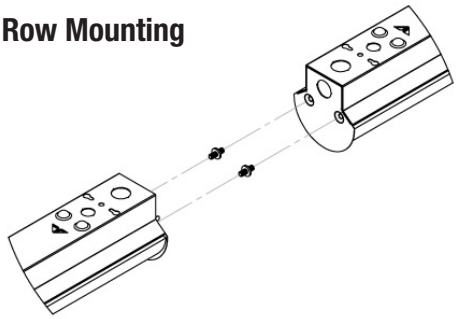

LAL 2474 4FT				LAL 2474 8FT			
Part Number	Description	Kit Qty	Qty/Plt	Part Number	Description	Kit Qty	Qty/Plt
2474 1410	4' Body	1	200	2474 1810	8' Body	1	200 (Double Size)
2474 1406	4' LED Gear Tray	1		2474 1406	4' LED Gear Tray	2	

Optional items

Part Number	Description	Qty	Qty/Carton
2380 17	Joiner	2	50
474 2452	4FT Curved Lens	1	36

Please contact A.L.P. for pricing and delivery.
All specifications subject to change without notice. A.L.P. assumes no responsibility for these materials in any luminaire or application.

A.L.P.
6333 Gross Point Road, Niles, IL 60714
Ph: (877) 257-5841 • Fx: (773) 774-9331
www.alpadvantage.com
© 2024 A.L.P. Lighting Components, Inc.
Sheet/REV# LAL2474 VN062624